MENNEKES
MY POWER CONNECTION

Plug PowerTOP TM
Part no. 24870

- screw terminals
- frame terminals
- highly heat resistant contact carrier
- nickel plated contacts
- cable gland and external cable grip
- with protective cap
- (form CP)

Technical specifications

Ampere	63 A
Poles	5 p
Voltage	400 V
Clock position	6 h
Hertz	50-60 Hz
Connection technology	Screw terminals
Contact	nickel plated contacts, highly heat resistant contact carrier
Protection type	IP 67
Weight	880 g
Declaration of Conformity	DE,VDE

Drawing

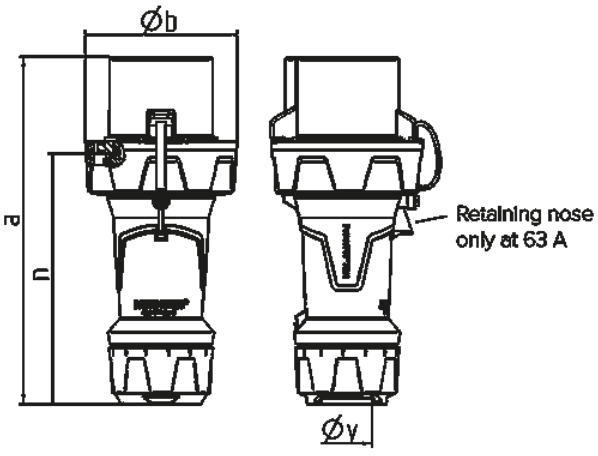

Drawing 2 MB 241	Amp. / Poles	63 / 5	125 / 5
Dim. in mm	a	260	300
	b	114	130
	n	188	219
	y	36	49
Terminal for cond. cross section (mm²) min.-max.		6 —16	25 —50

Subject to modificat. No liability for misprints.